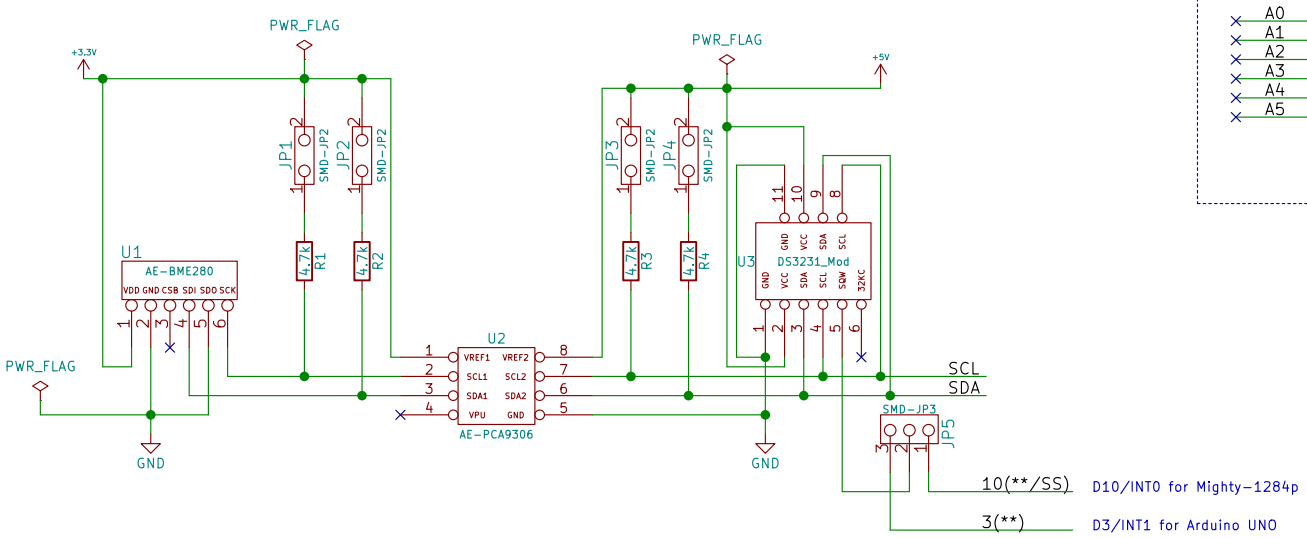

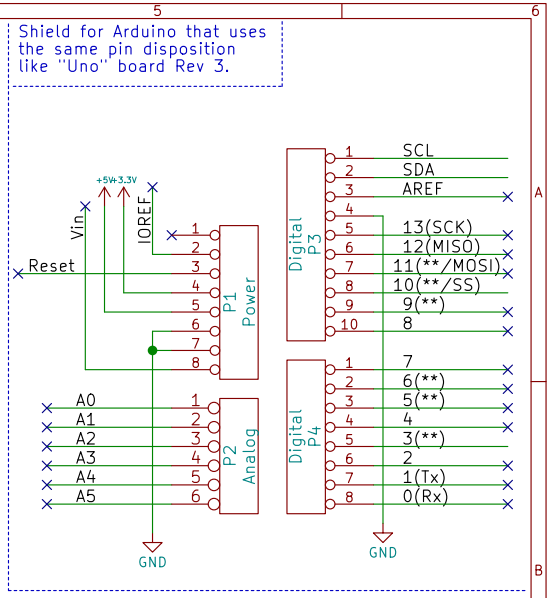

JE3JLB

Sheet: /

File: Arduino_As_Uno.sch

Title: Weather_and_timer

Size: A4	Date: 2017-06-06	Rev:
KiCad E.D.A. kicad 4.0.6		Id: 1/1